Compact laptop / PC desk

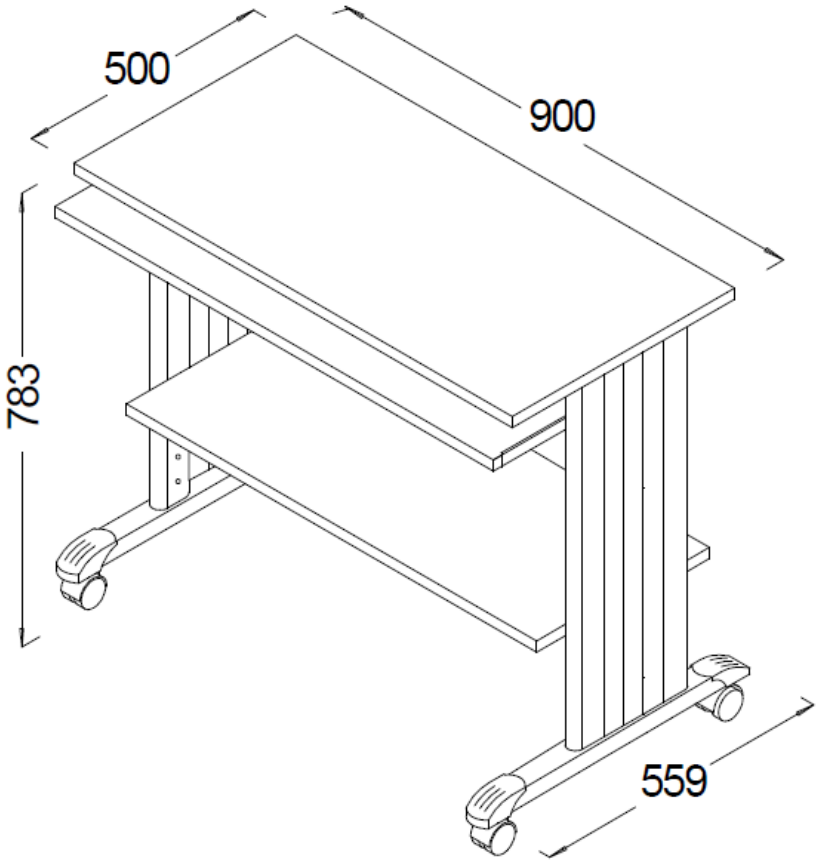

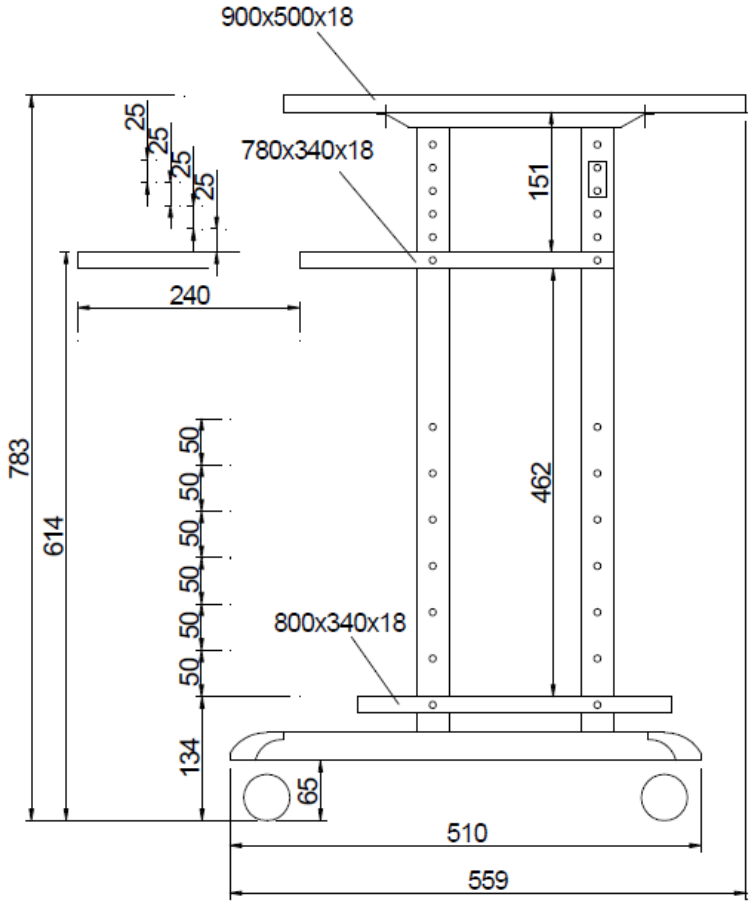

All dimensions in mm - Dimensions en mm - Abmessungen in mm - Alle afmetingen in mm